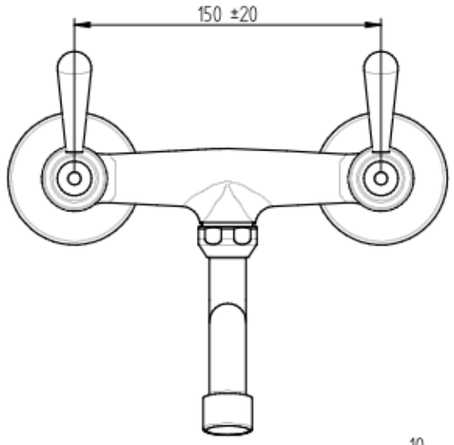

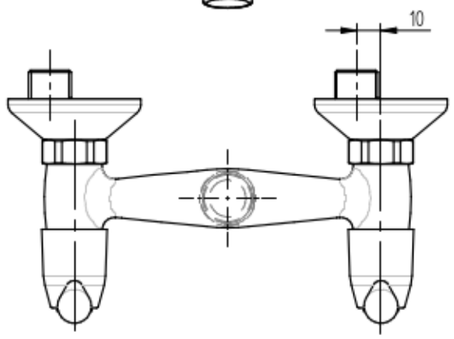

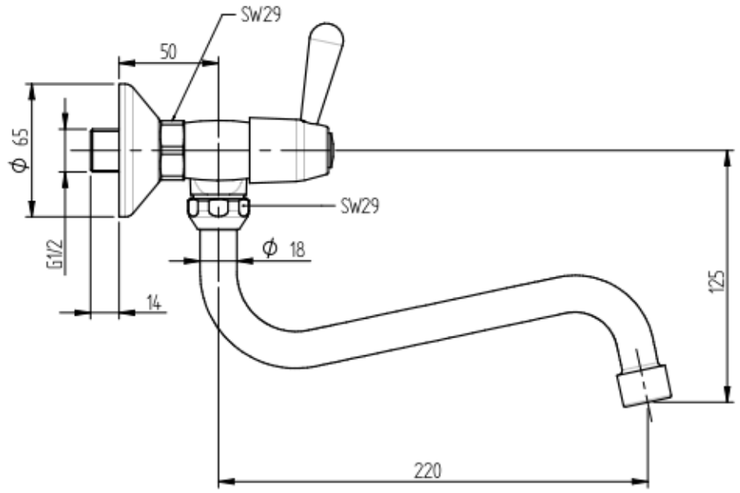

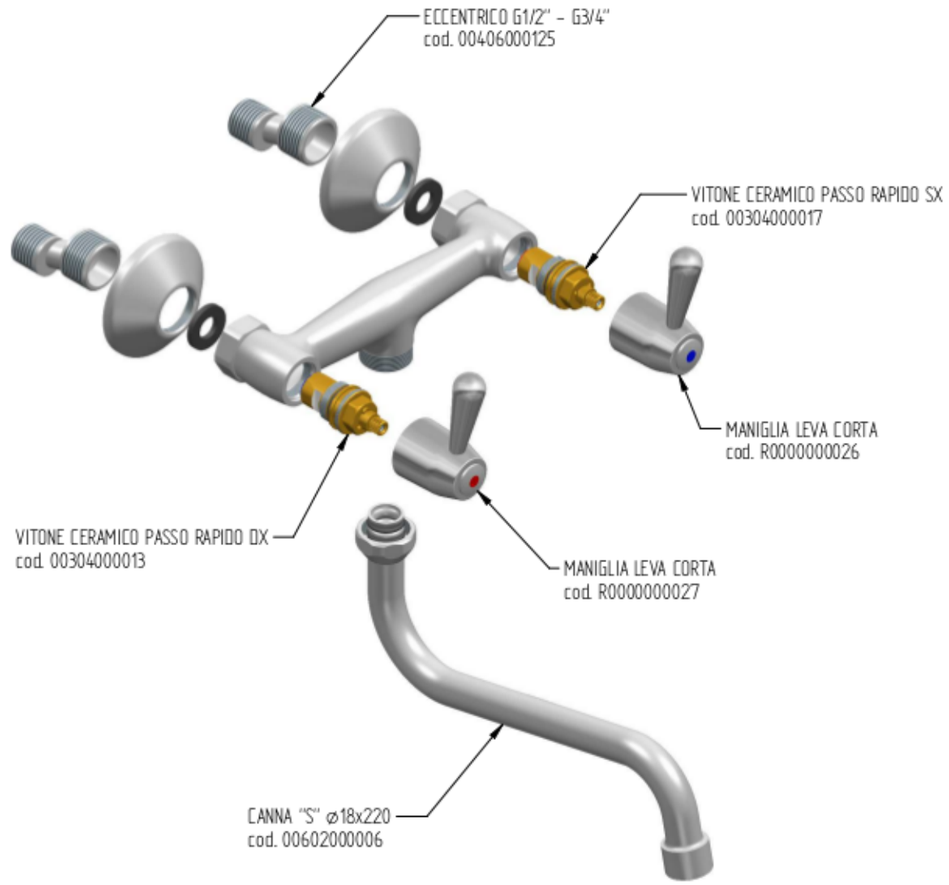

Shop Group S.r.l.
Via A. de Gasperi, 3
01033 Civita Castellana (VT)
Servizio assistenza clienti
Tel 0761/599396
email: info@shopgroup.it

Rev. 00